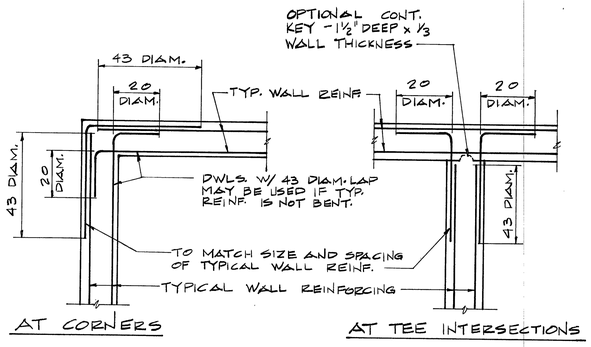

1/S4 TYPICAL PLAN DETAILS OF CORNER BARS
NOT TO SCALE

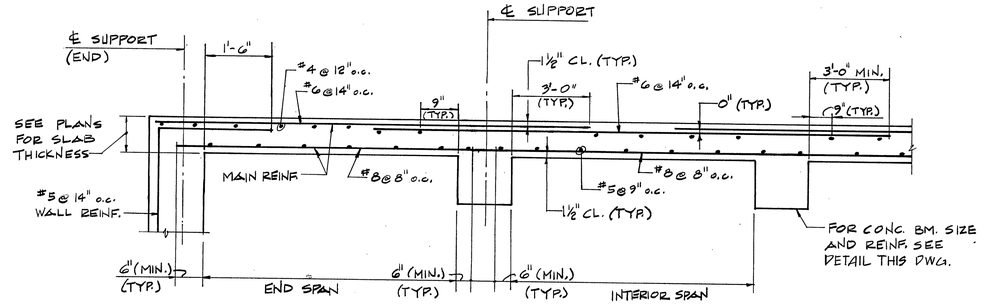

2/S4 TYPICAL SECTION THRU ONE WAY SLABS AT FLOORS
NOT TO SCALE

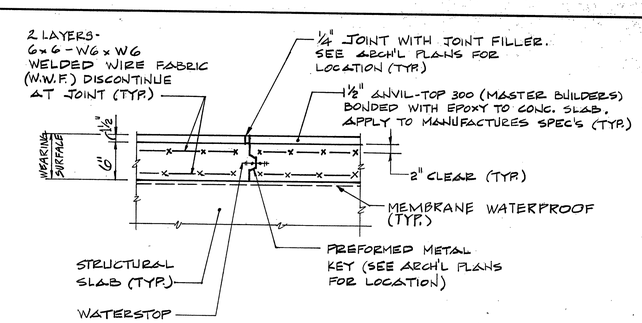

3/S4 TYPICAL CONSTRUCTION JOINT DETAIL AT WEARING SURFACE SLAB
NOT TO SCALE

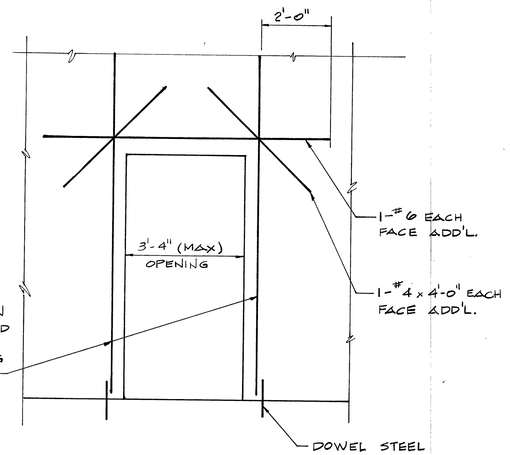

4/S4 TYPICAL REINFORCEMENT AT OPENINGS
NOT TO SCALE

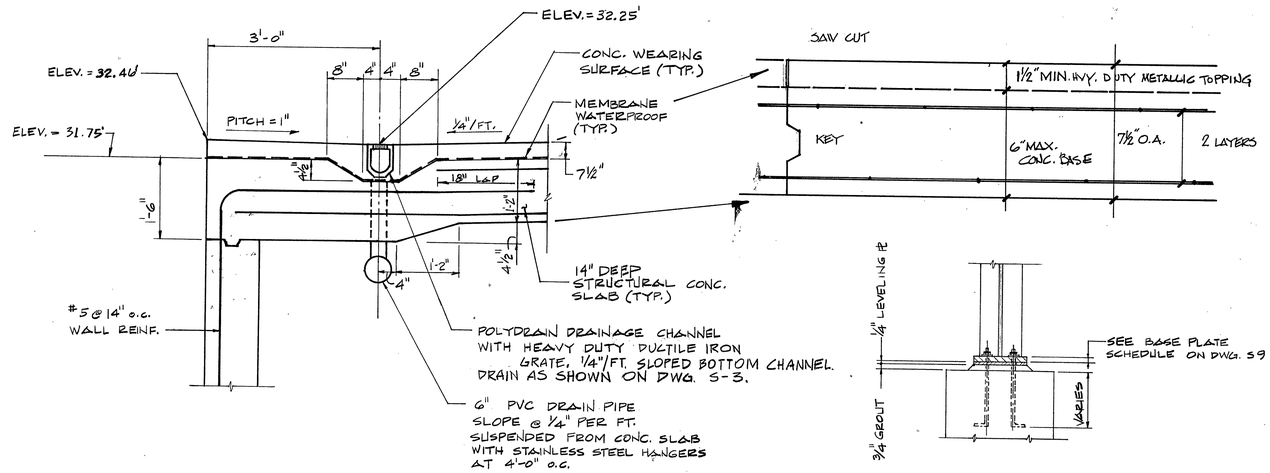

5/S4 TYPICAL SLAB DETAIL AT DRAINAGE SYSTEM
NOT TO SCALE

6/S4 COLUMN BASE PLATE DETAIL
NOT TO SCALE

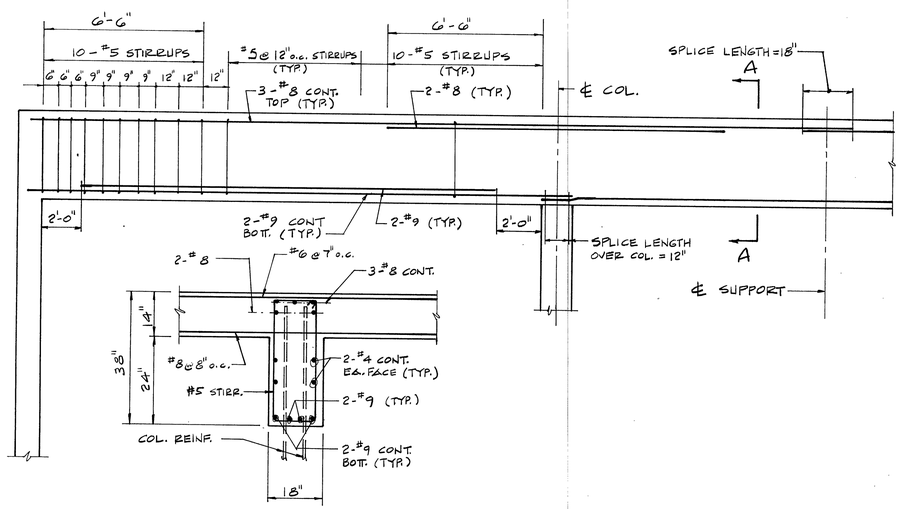

7/S4 TYPICAL BEAM REINFORCEMENT
NOT TO SCALE

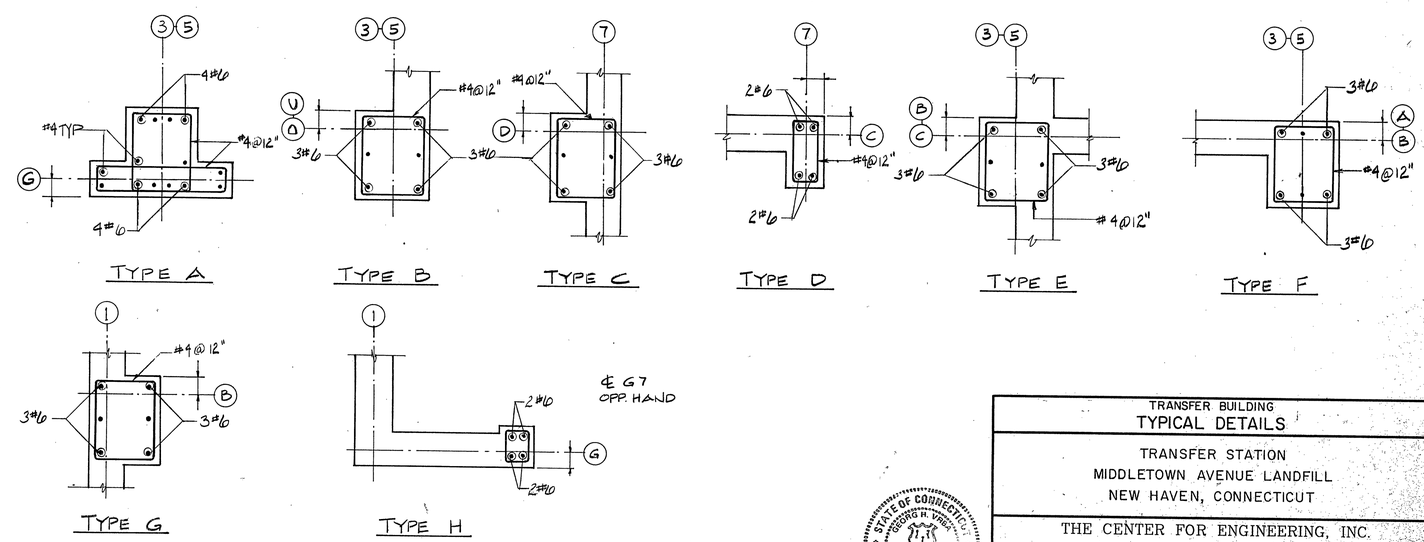

8/S4 PIER TYPES
SCALE: ½" = 1'-0"

STATE OF CONNECTICUT GEORG H. VARGA No. 14934 LICENSED PROFESSIONAL ENGINEER

TRANSFER BUILDING
TYPICAL DETAILS

TRANSFER STATION
MIDDLETOWN AVENUE LANDFILL
NEW HAVEN, CONNECTICUT

THE CENTER FOR ENGINEERING, INC.
— Consulting Engineers —
116-118 CENTER STREET • WALLINGFORD, CONNECTICUT 06492

DESIGNED	G.H.V.	CHECKED	C.N.S.	DATE	3-22-90	PROJECT No.	1115-09-B
DRAWN	L.D.	APPROVED	C.T.B.	SCALE	AS NOTED	SHEET No.	S-4