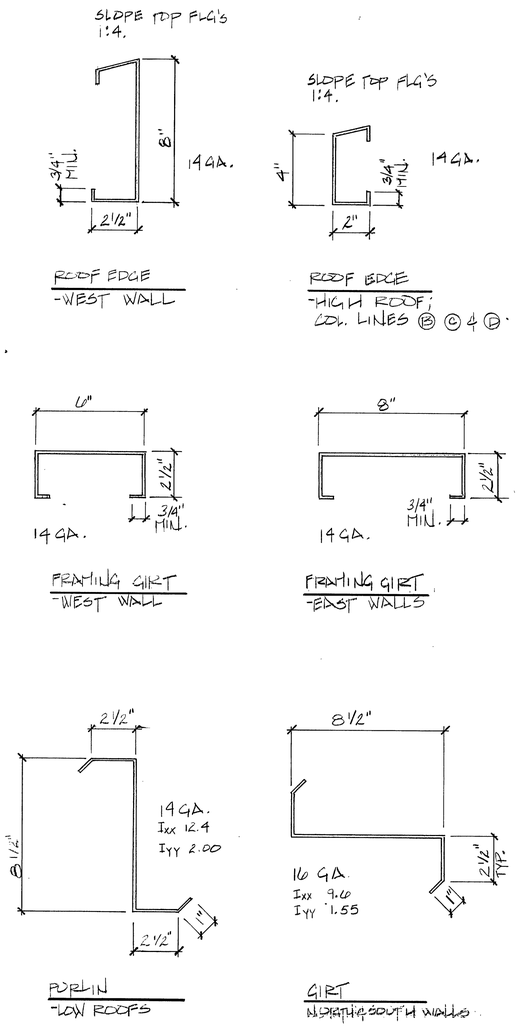

1 A11 COLD-ROLLED MEMBERS
SCALE: 3" = 1'-0"

-NOTE: ALL ARE GALVANIZED

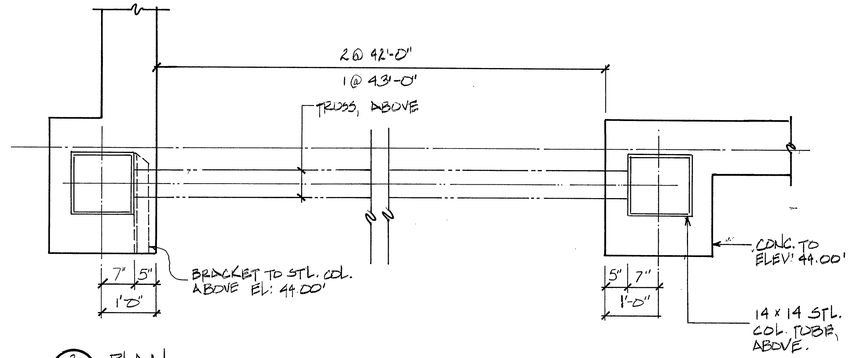

2 A11 PLAN
SCALE: 3/4" = 1'-0"
-NOTE: 3 OPENINGS

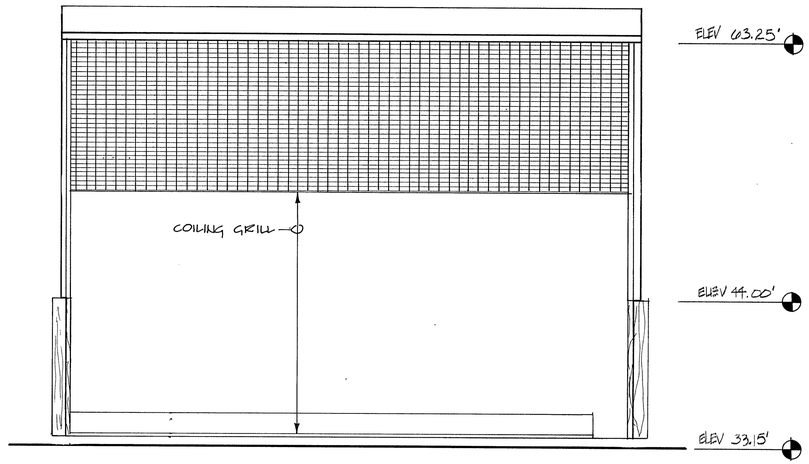

3 A11 COILING GRILL DETAIL ELEV.
SCALE 3/16" = 1'-0"

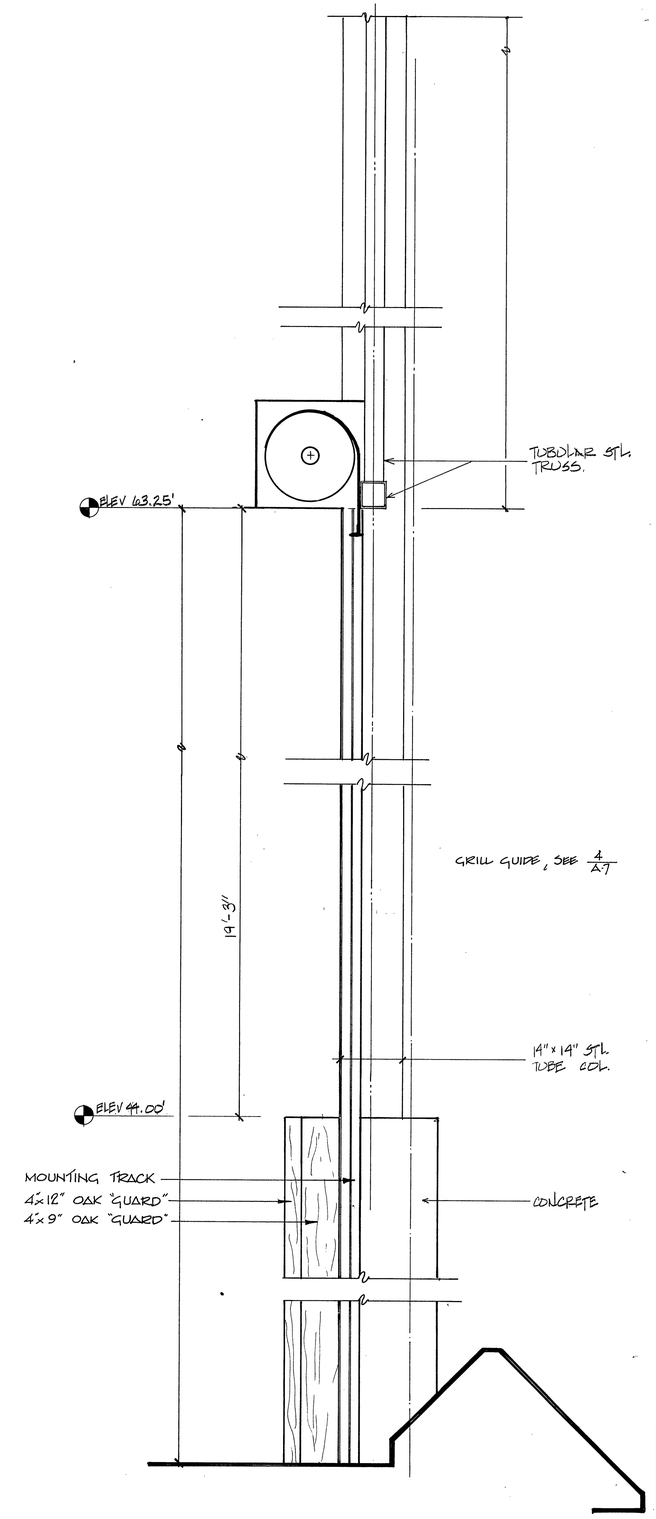

4 A11 MOUNTING DETAIL - COILING GRILL
SCALE: 3/4" = 1'-0"

CFA
THE CENTER FOR ARCHITECTURE, INC.
Architecture & Engineering
TELEPHONE (203) 269-6004
FAX (203) 269-3332
116-118 CENTER STREET, P.O. BOX 1618
WALLINGFORD, CONNECTICUT 06492

Transfer Station
Middletown Avenue Landfill
New Haven, Connecticut
Gate Details

Drawn by: SKB
Checked by: CKS
Date: JULY 2, 1990
Revisions:

A11

1115-09-B