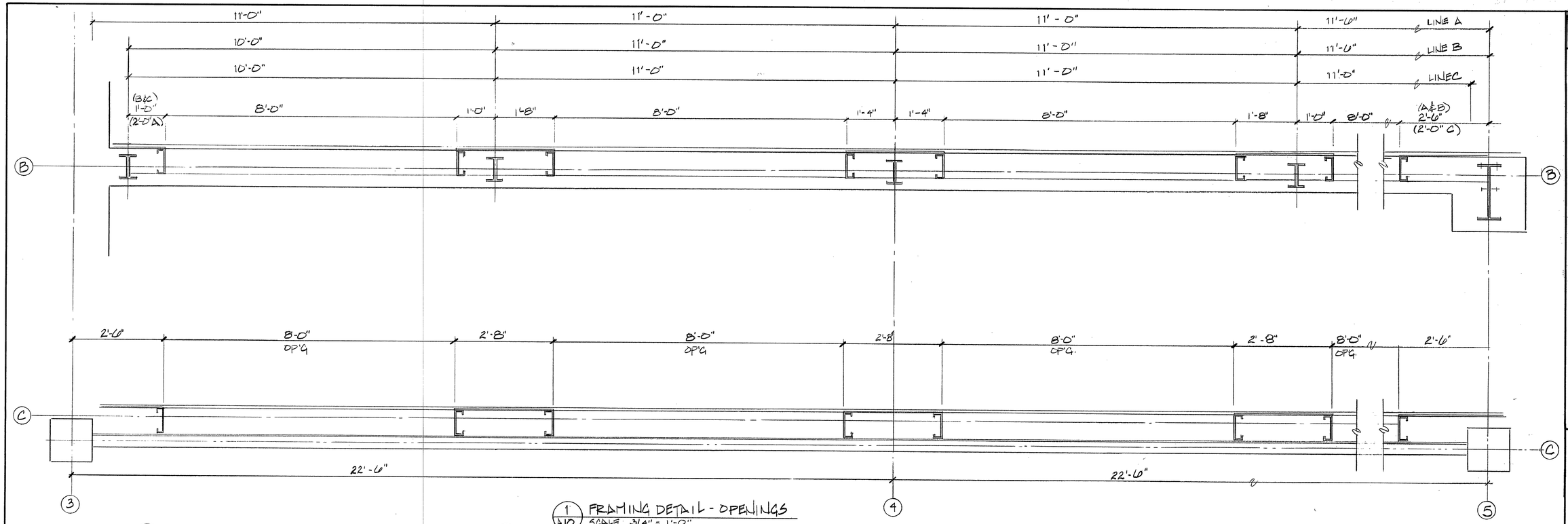

1/A10 FRAMING DETAIL - OPENINGS
SCALE 3/4" = 1'-0"

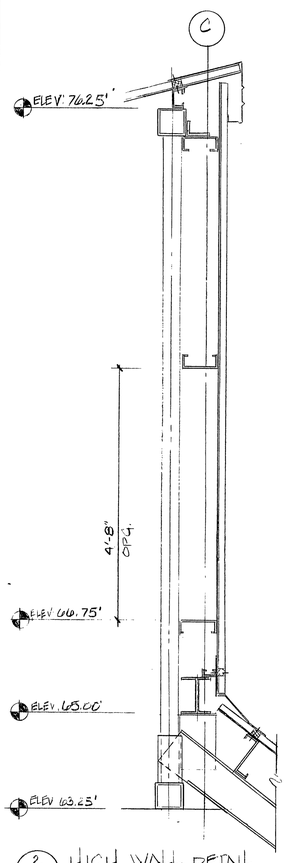

2/A10 HIGH WALL DETAIL
SCALE 3/4" = 1'-0"

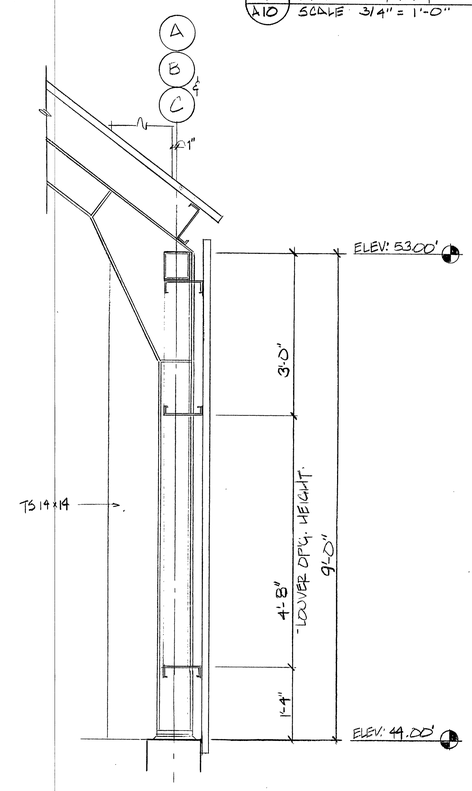

3/A10 LOW WALL DETAIL
SCALE 3/4" = 1'-0"

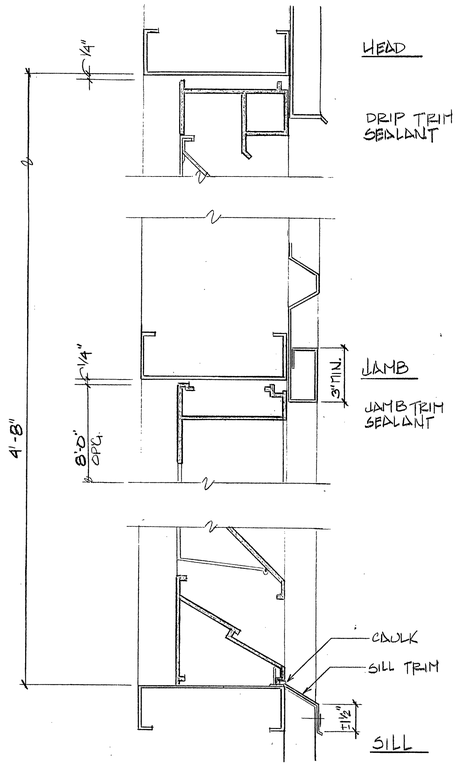

4/A10 DETAIL OF LOUVER OPENINGS
SCALE: 3" = 1'-0"

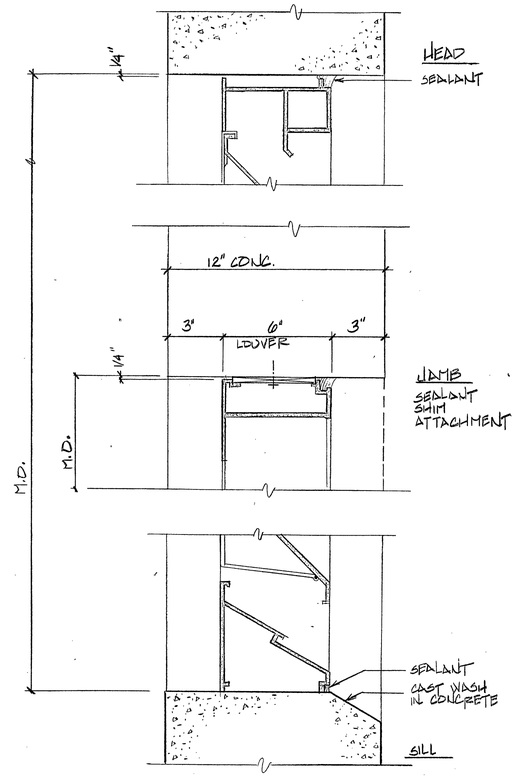

5/A10 DETAIL OF LOUVER IN CONCRETE WALL
SCALE 3" = 1'-0"
-EXHAUST FAN SIMILAR

CFA
THE CENTER FOR ARCHITECTURE, INC.
Architecture & Engineering
116-118 CENTER STREET, P.O. BOX 1618
WALLINGFORD, CONNECTICUT 06492
TELEPHONE (203) 269-6004
FAX (203) 269-5502

Transfer Station
Middletown Avenue Landfill
New Haven, Connecticut
Louver Details

Drawn by: SKB
Checked by: CKS
Date: JULY 2, 1996
Revisions:

A10

1115-09-B